Diritti riservati All rights reserved

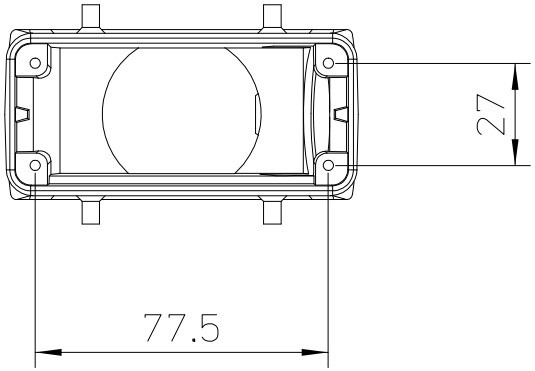

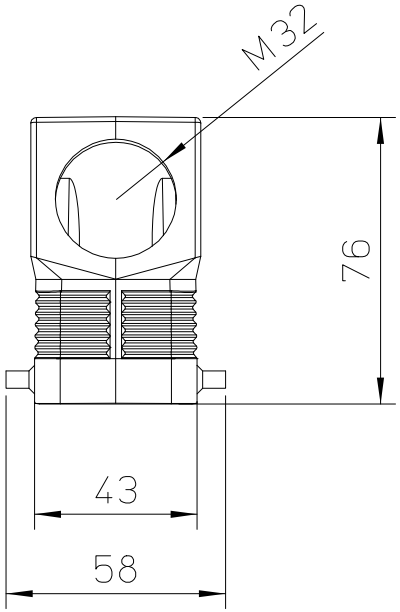

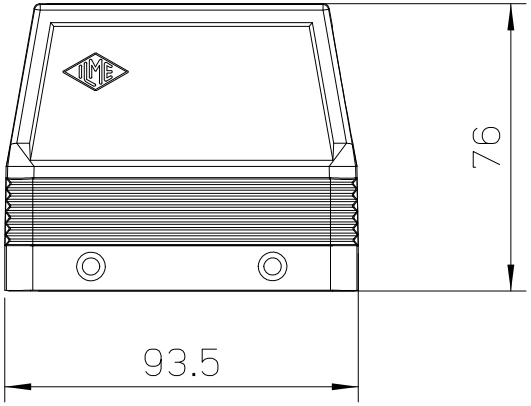

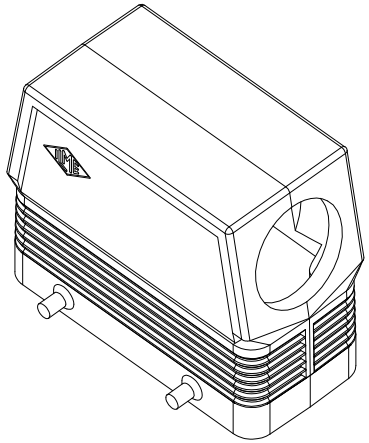

dimensions in mm	MFOE 16.32M	Scale
Date 07/03/17	Hood, with entry M32 - E-XTREME	1:2
Sign. C. Mainini		